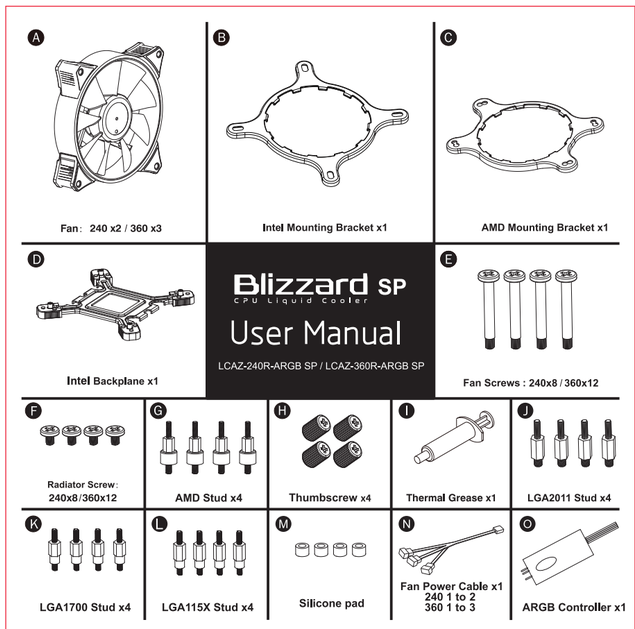

1 Intel 1200 115X 1366 1700 1800

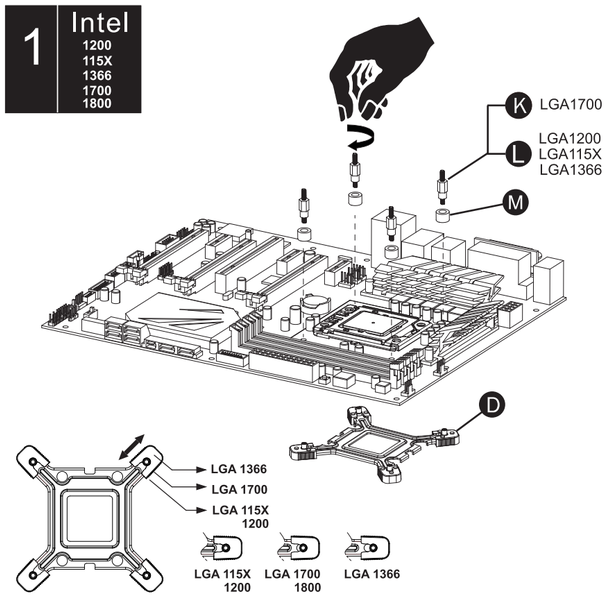

1 Intel 20XX

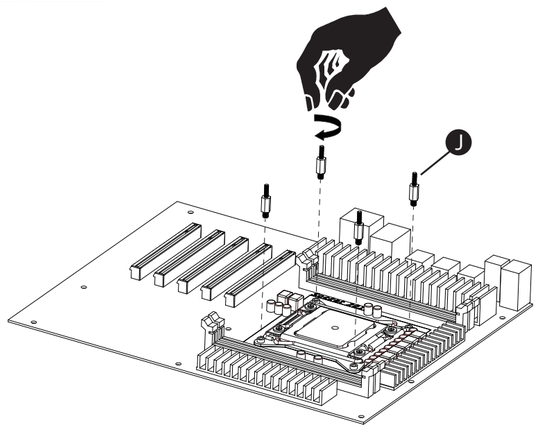

1 AMD

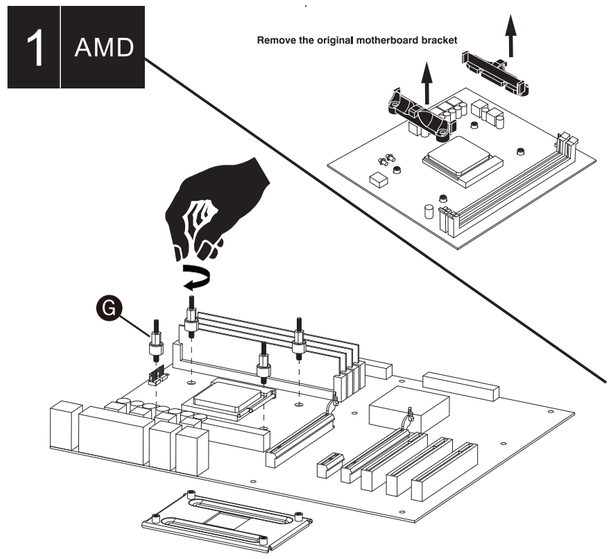

2 Intel

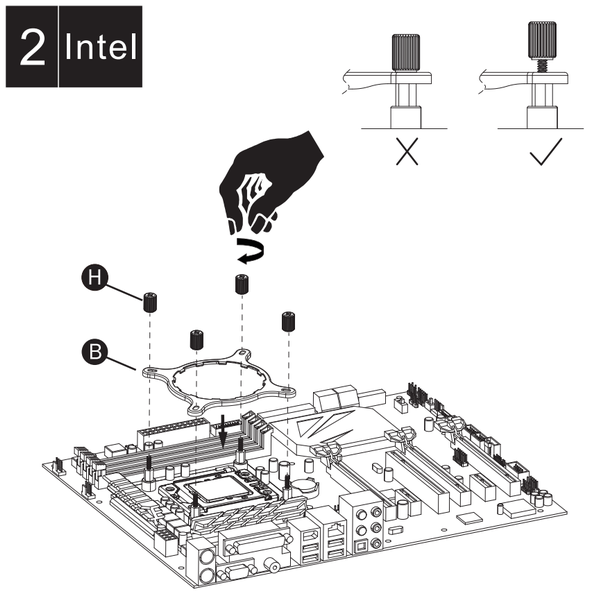

2 AMD

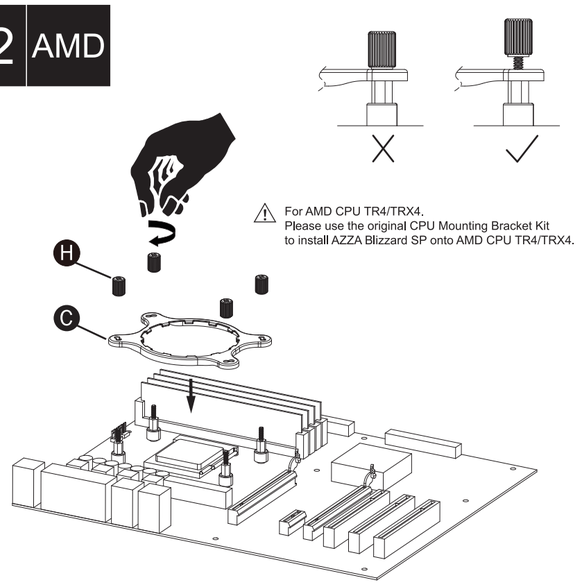

3 Intel AMD

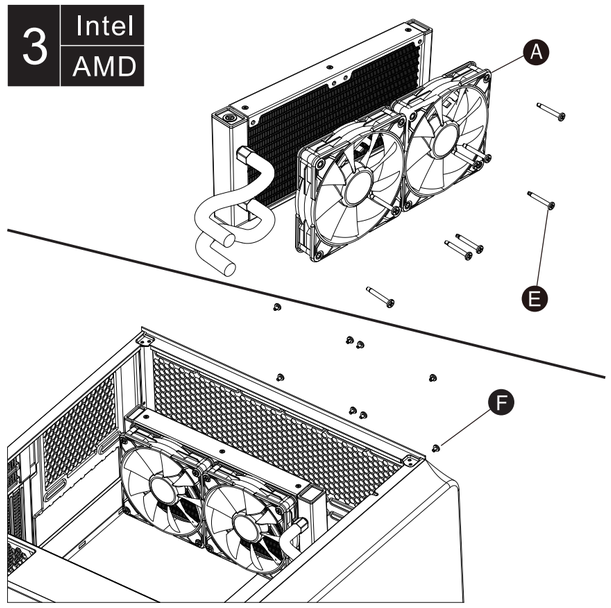

4 Intel AMD

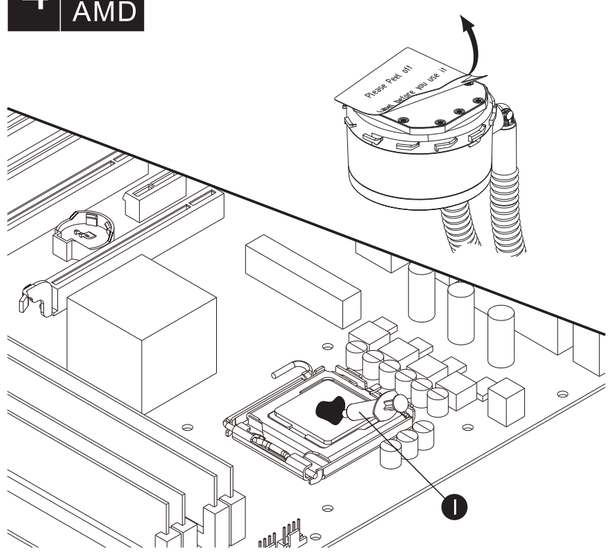

5 Intel AMD

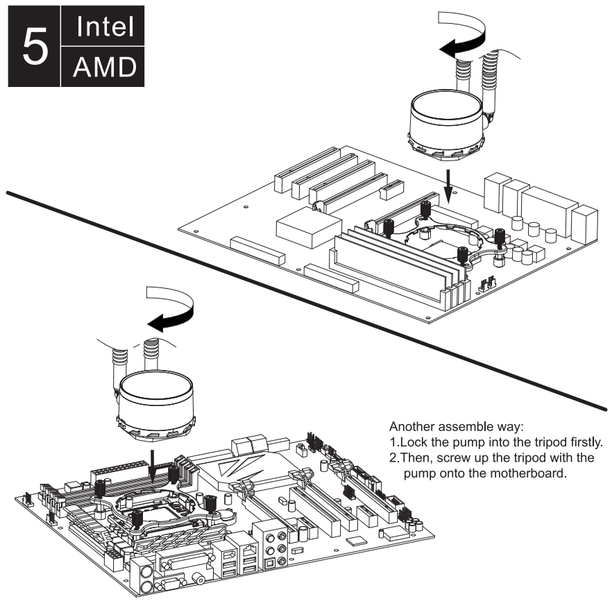

6 Intel AMD

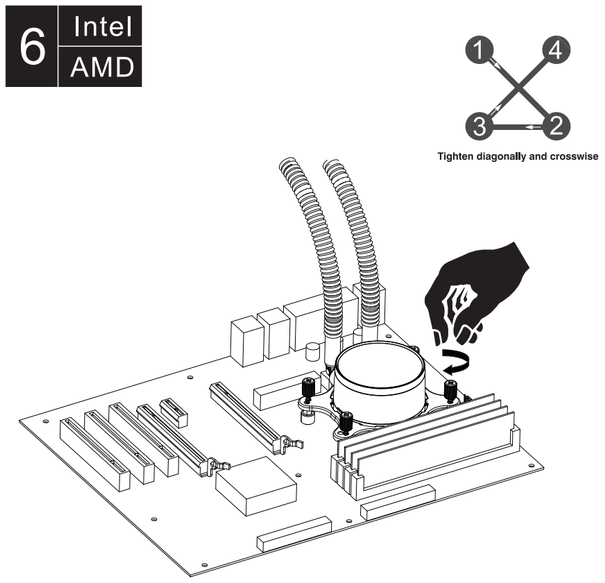

7 Intel AMD

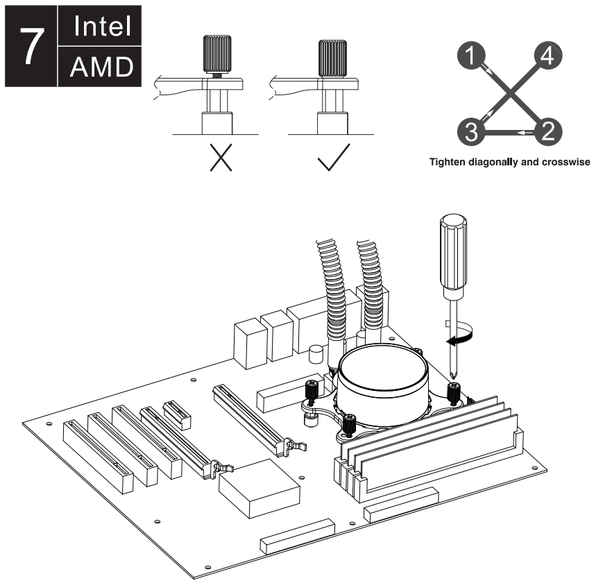

8 Intel AMD ARGB Motherboard Connection

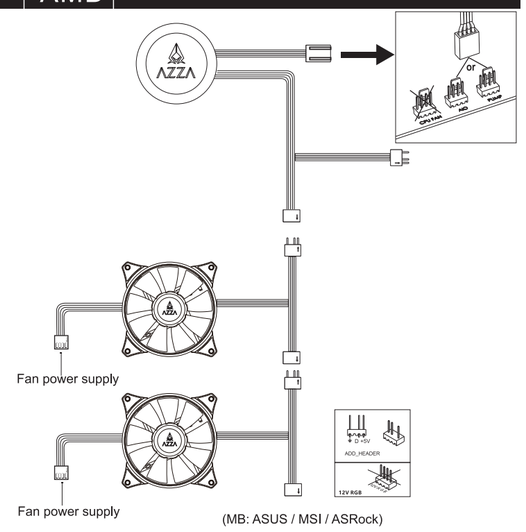

9 Intel AMD ARGB Controller Connection

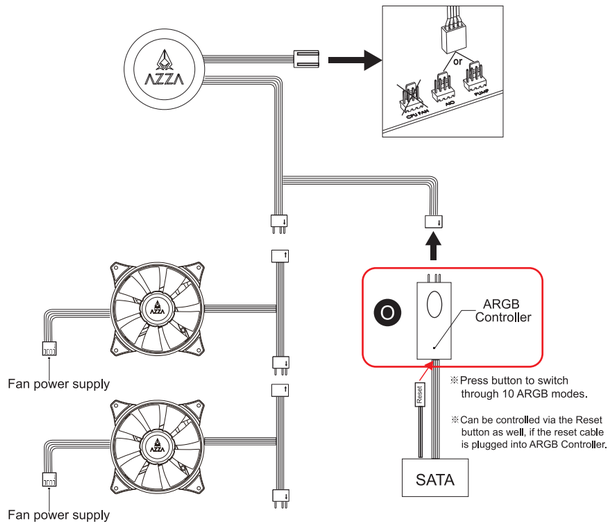

10 Intel AMD PWM Y-Cable instruction (Fan Power Supply)

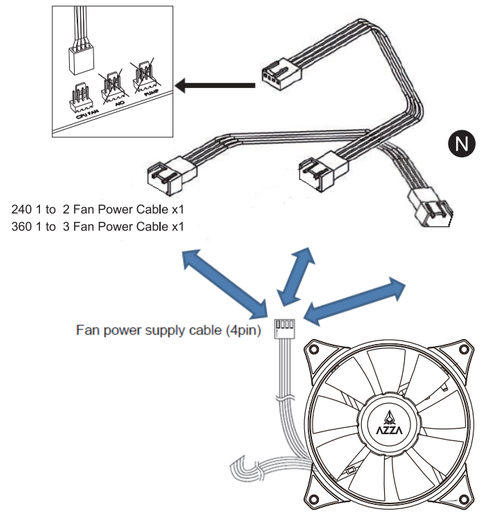

11 Intel AMD Logo direction can be changed

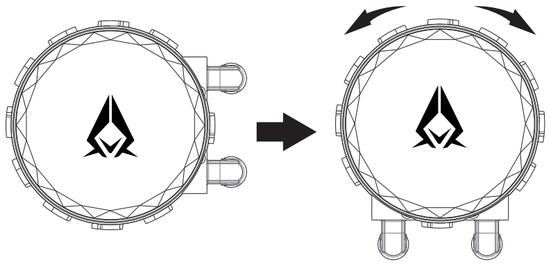

MEMO